Data Sheet

Article number: 203150M1243B2X
Description: E+G levelling foot
GN 31-50-M12-43-B2-X
Note: X With female thread, External hexagon

Measures

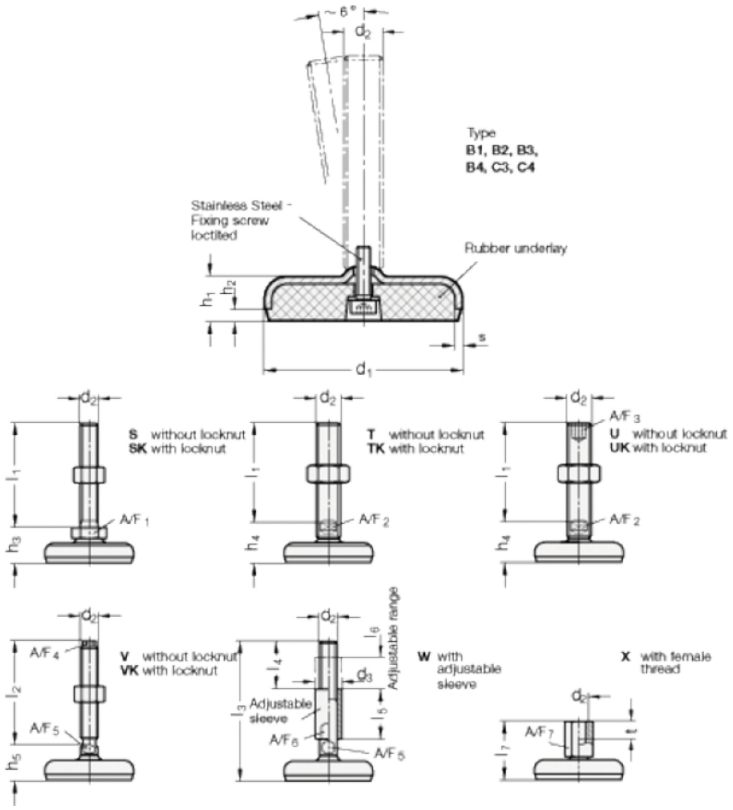

A/F7	= 17
d1	= 50
d2	= 12
h1	= 14.5
h2	= 3.5
l7 +4.0/0	= 43
s	= 3
t	= 12

Product drawings and brochures of any kind may contain errors for which Brd. Klee A/S cannot be liable.